EXPERIMENTAL DETERMINATION OF THE FLOW CAPACITY COEFFICIENT FOR CONTROL VALVES OF PROCESS

G. ARAGÓN-CAMARASA, G. ARAGÓN-GONZÁLEZ,
A. CANALES-PALMA and A. LEÓN-GALICIA

Programa de Desarrollo Profesional en Automatización. UAM Azcapotzalco. Av. San Pablo # 180, Col. Reynosa. Azcapotzalco, 02200. México, D.F. Tel. y Fax: 5318-905
e-mail: gag@correo.azc.uam.mx

***Abstract*— A test bench was conceived in order to determine experimentally the flow coefficient [C_V] for process control valves, operating with compressible fluids, under established regulations by the standards ANSI/ISA-75.02-1996 and ANSI/ISA-75.01.01-2002. This test bench is used to verify the calibration of valves with continually variable opening, after they have been repaired. The measurements in the test bench allow establishing the C_V of these valves for various opening percentages. It was necessary to go through the C_V equation for compressible fluids, to proceed with the flow sensor selection. This equation was obtained under similarity conditions by the equality of Euler numbers between prototype and model (test specimen). It is also described the electronic instrumentation for measuring flow, temperature and pressure difference, the design and the development of electronic circuits which control the instrumentation, and the algorithms for the operation and acquisition of measurements.**

***Keywords*— Flow Capacity, Euler number, Electronic instrumentation and control.**

I. INTRODUCTION

The process control valves are widely used in manufacture operations and industrial processes. These valves open and close to connect or suspend a fluid supply, or to control the feeding of liquids and gases in a certain process. A typical application is the steam feeding for heating a vulcanizing press or for plastic injection. These valves are designed and built with different shapes and various materials, in function of the liquid, steam or gas used in several factories.

A process control valve generally represents the last element of a control loop installed in a process line. These valves are actuated by a remote signal, often pneumatic, to command their opening and closing. Other types of control valves are more refined and do not only take two positions (on/off); they could even change the plug area to modify continually the flow rate that goes through the valve.

For operating continually variable valves is necessary to know the relationship between the aperture percentages and the flow amount, for a certain pressure difference applied between the input and output of the valve. Frequently a standardized procedure is used to define the flow capacity of process control valves: it is a well-known size denominated *flow capacity coefficient* and denoted by C_V. This coefficient was introduced in 1944 by a manufacture company of valves named Masoneilan, originally for liquid flows (Masoneilan, 2000). In a short time it was adopted universally like a practical manner for showing the valve capacity. It is an indication of how much flow could pass through in a control valve, when a well defined pressure difference is applied. Higher $\dot{Q}$, the flow capacity is greater, for a certain pressure drop. Different valves or unlike port diameters, but with the same C_V, have exactly identical flow capacity.

Traditionally, for valves that carry a compressible fluid, the flow capacity coefficient is defined as the air flow —expressed on standard conditions in ft^3/min [m^3/s]— that will cross through the valve when a pressure difference of 1 psi [6.89 kPa] is applied (for liquid flow, C_V is defined as the water flow at 60 °F [288.7 K], expressed in gallons per minute, that cross the valve and create a pressure drop of 1 psi [6.89 kPa] (see for example SEMASPEC-90120394B-STD, 1993). Despite the flow capacity coefficient C_V was originally defined in English Units, it could be built in metric units (FCI 84-1-1985, 1985). Usually some authors distinguish the coefficient in metric units as "*flow factor*" and they denote it with K_V.

On the other hand, when a process valve fails, generally by seat wear problems, it must be recalibrated after reparation. In other words, the flow capacity coefficient of the valve for different opening percentages must be verified experimentally. There are international standards, in which describe tests for these valves, where it is established the necessary instrumentation and the right experimental procedures. In the literature there are several works recommending procedures for the experimental determination of the flow capacity coefficient (Wing, 1960), for liquid flow (Rahmeyer, 2008; and SEMI F32-0706, 2006), as well as flow of gas and steam (Driskell, 1983 and Fu and Ger, 1998). These papers contain suggested experimental equations, very similar to those found in the standards ANSI/ISA-75.02-1996 (1966) and ANSI/ISA-75.01.01-2002 (2002). However, from one manufacturing company to another, the obtained results with the experimental determination of C_V do not necessary match or represent the same, because they are based in different test procedures (Fleischer *et al.*, 2000).

In this work we describe the operation of a new test bench, to determine the C_V of process control valve with

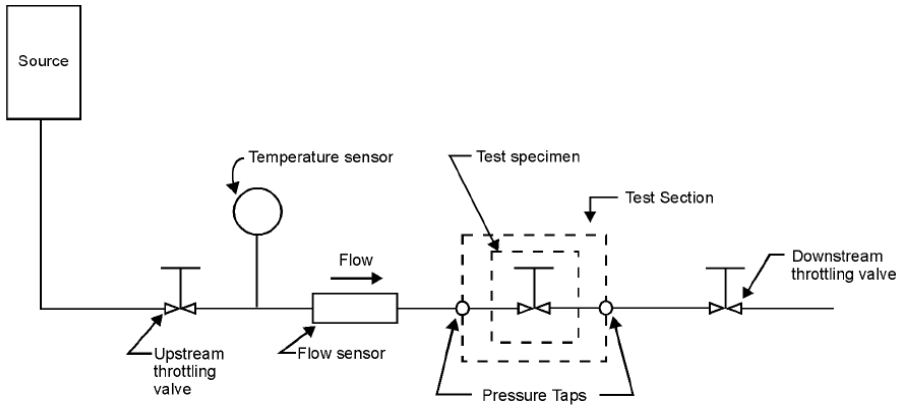

Fig. 1. Test circuit suggested by the standard ANSI/ISA-75.02-1996 (1996).

compressible fluid under the regulations established by the standards ANSI/ISA-75.02-1996 (1996) and ANSI/ISA-75.01.01-2002 (2002). This test bench is used to verify the calibration of valves with continually variable opening, after they have been repaired. The measurements in the test bench allow establishing the C_V of these valves for various opening percentages.

In order to proceed with the flow sensor selection, it was necessary to go trough the C_V equation for compressible fluids. This equation was obtained under similarity conditions, by the equality of Euler numbers between prototype and model (test specimen). Finally we describe the electronic instrumentation for measuring flow, temperature and pressure difference, the design and the development of electronic circuits which control the instrumentation and the algorithms for the operation and acquisition of measurements.

II. TEST PROCEDURES FOR CONTROL VALVES

The standard ANSI/ISA-75.02-1996 (1996) suggests the test procedures to determine the capacity of control valves. The eighth and ninth sections of this standard define the test procedure and the data evaluation procedure for compressible flows, respectively. Figure 1 shows the basic construction of the test system. The standard ANSI/ISA-75.01.01-2002 (2002) defines equations for sizing control valves and showing the result as a flow capacity coefficient, C_V. The seventh section of this standard includes the equations for compressible flows.

Figure 2 summarizes the test procedure followed with our test bench. The annex B.2 of ANSI/ISA-75.02-1996 (1996) contains a detailed flow diagram to execute the calculations for compressible fluids and define the C_V.

The test bench instrumentation was chosen under specifications of standards ANSI/ISA-75.02-1996 (1996) and ANSI/ISA-75.01.01-2002 (2002). Three physical variables must be obtained: pressure, temperature and flow rate, with the following characteristics:

- Pressure. All pressure measurements should be taken with an error not exceeding ±2% of the actual value.
- Temperature. The flow temperature should be measured within an error not exceeding ±1ºC (±2ºF) of actual value.
- Flow. The flow rate instrumentation may be any device that meets specified accuracy. This instrument will be used to determine the true time average flow rate within an error not exceeding ± 2% of the actual value. The resolution and repeatability of the instrument must be within ± 0.5%.

The selection for pressure and temperature sensors was immediate because we only considered the operation limits for these variables. The readings for valve characterization are taken at environmental temperature (300 K) and it is expected a pressure drop not bigger than 50 psi [344 kPa] between the valve's ports, with a static pressure not greater than 1 MPa [145.4 psi].

However, for selecting a flow sensor it was necessary to specify the flow range because there was a wide range of valves that could be characterized with this test

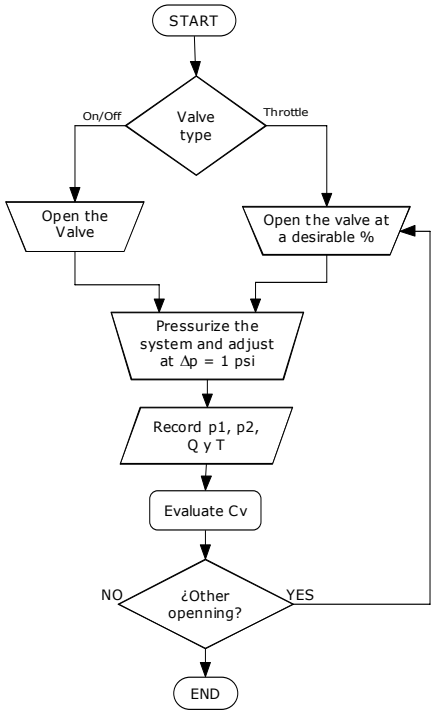

Fig. 2. Flow coefficient test procedure.

bench. A greater valve capacity (greater C_V) means that a bigger flow rate may pass through the valve for a certain pressure difference. Thus it was necessary to develop the C_V concept for compressible flow and convert this numerical data to flow rate at free air conditions in order to limit the maximum flow that it may be obtained during a test valve.

In summary, the standards ANSI/ISA-75.02-1996 (1996) and ANSI/ISA-75.01.01-2002 (2002) only suggest the components, the test configuration (Fig. 1) and the test procedure showed in the flow diagram (Fig. 2). Thus, without proper consideration and the components dimensions to perform the test, we had to set up the characteristics and dimensions of each component during the design stage of this test bench. Almost all the components were easily determined, but the flow sensor was the exception because in order to find the flow coefficient C_V and determine its characteristics and expected sizes we had to performance a remarkable dimensional analysis (Eq. 12 of the following section). This analysis is the one that allows us to size and characterize the flow sensor, to design the electronic instrumentation and, consequently, to build the test bench.

III. FLOW COEFFICIENT FOR VALVES WITH COMPRESSIBLE FLUIDS

The C_V coefficient of a valve prototype is established experimentally, taking measures of its capacity in conditions of dynamic similarity through Euler number (Rahmeyer and Driskell, 1985). The Euler number relates the inertia forces with the pressure forces, in a dimensionless ratio:

$$\mathrm{Eu} = \frac{\bar{v}}{(2\Delta p/\rho)^{1/2}}, \tag{1}$$

where $\bar{v}$ is the average velocity of the flow through the valve, Δp is the applied pressure difference and ρ is the liquid's flow density. The measurements are performed passing a flow of certain test gas through the valve (the valve operating as a model), to produce a pressure drop of 1 psi (6.89 kPa). We will consider that in model and prototype flow any pair of gases, not necessarily in standard conditions. Thus, the dynamic similarity is established by the equality of Euler numbers between model and prototype:

$$\frac{\bar{v}_m}{(2\Delta p/\rho)_m^{1/2}} = \frac{\bar{v}_p}{(2\Delta p/\rho)_p^{1/2}}, \tag{2}$$

The pressure drop, applied between the inlet port 1, and outlet port 2, of the valve, is the difference $\Delta p = p_1 - p_2$. This pressure drop in the prototype can be expressed as a ratio x of the absolute pressure at the valve inlet, $\Delta p_p = x \cdot p_1$. Thus, the Eq. (2) is:

$$\bar{v}_p = \bar{v}_m \left(\frac{x p_1 \rho_m}{\Delta p_m \rho_p} \right)^{1/2}, \tag{3}$$

Hence,

$$\bar{v}_p = \bar{v}_m \left(\frac{x p_1}{\Delta p_m} \frac{\rho_m}{\rho_{me}} \frac{s_m}{s_p} \frac{\rho_{pe}}{\rho_p} \right)^{1/2}, \tag{4}$$

Since,

$$\frac{\rho_m}{\rho_p} = \frac{\rho_m}{\rho_{me}} \frac{\rho_{me}}{\rho_{ae}} \frac{\rho_{ae}}{\rho_{pe}} \frac{\rho_{pe}}{\rho_p} = \frac{\rho_m}{\rho_{me}} s_m \frac{1}{s_p} \frac{\rho_{pe}}{\rho_p}, \tag{5}$$

The relative density is a dimensionless ratio that compares the gas density with the air density, both in standard conditions (subscript e; T_e = 15.6 °C = 60 °F and p_e = 101 325 Pa = 14.73 psia).

As $\dot{Q} = vA$ and the orifice transversal area of the valve is the same, used as model or prototype, hence:

$$\dot{Q}_p \left(\frac{\rho_p}{\rho_{pe}} \right)^{1/2} = \dot{Q}_m \left(\frac{x p_1}{\Delta p_m} \frac{\rho_m}{\rho_{me}} \frac{s_m}{s_p} \right)^{1/2}, \tag{6}$$

The ratios ρ/ρ_e express the density change of each gas (p, T) in model and prototype with respect to the corresponding density in standard conditions (p_e, T_e). The equation of ideal gases, including the compressibility factor z, is:

$$\frac{\rho}{\rho_e} = \frac{1}{z} \frac{p}{p_e} \frac{T_e}{T}, \tag{7}$$

Thus, the flow rates of each side of the equations could be expressed as flow rates in standard conditions, $\dot{Q}_e = \dot{Q} \frac{\rho}{\rho_e}$, then:

$$\dot{Q}_p \frac{\rho_p}{\rho_{pe}} \left(\frac{\rho_{pe}}{\rho_p} \right)^{1/2} = \dot{Q}_m \frac{\rho_m}{\rho_{me}} \left(\frac{x p_1}{\Delta p_m} \frac{\rho_{me}}{\rho_m} \frac{s_m}{s_p} \right)^{1/2}, \tag{8}$$

and for the model:

$$\dot{Q}_{me} = \dot{Q}_{pe} \left(\frac{\rho_{pe}}{\rho_p} \frac{\Delta p_m}{x p_1} \frac{\rho_m}{\rho_{me}} \frac{s_p}{s_m} \right)^{1/2}, \tag{9}$$

Now, if the model is tested with air in standard conditions, with a flow rate that produces the pressure drop $\Delta p_m = 1$ *psi*, then $\rho_m = \rho_{me}$, $s_m = 1$ and $\dot{Q}_{me} = C_v$. Thus:

$$C_v = \frac{\dot{Q}_{pe}}{p_1} \left(\frac{\rho_{pe}}{\rho_p} \frac{s_p p_1}{x} \right)^{1/2}, \tag{10}$$

Then the expression for C_V is given for:

$$C_v = \frac{\dot{Q}_{pe}}{p_1} \left(\frac{s_p T_1 z}{x} \frac{p_e}{T_e} \right)^{1/2}, \tag{11}$$

since: $\frac{\rho_{pe}}{\rho_e} = \frac{p_e}{p_1} \frac{z T_1}{T_e}$.

The Eq. (6) was multiplied by the transversal area of the valve, supposing that it is identical in model and prototype. But, a fluid stream is often reduced when it goes through an orifice, forming the called *vena contracta*. In the vena contracta a slimming of the transverse section is showed, which it implies a velocity rise and thus a decrease of pressure that changes the density of the gas. Taking into account this last phenomenon, we include the expansion factor Y in the right denominator and if we denote $N_7 = (T_e / P_e)^{1/2}$, thus the equation is:

$$C_v = \frac{\dot{Q}_{pe}}{N_7 p_1 Y}\left(\frac{s_p T_1 z}{x}\right)^{1/2}, \qquad (12)$$

To evaluate the expansion factor *Y* the equation (13) of the standard ANSI/ISA-75.01.01-2002 (2002) is used:

$$Y = 1 - \frac{x}{3F_\gamma x_T}, \qquad (13)$$

The last expression was obtained by supposing a pressure drop of *1 psi* applied to the model during the test, but this is not compulsory. This equality defines a unique flow coefficient for each valve with certain opening percentage. Many possible combinations of applied pressure difference and the corresponding flow rate through the valve will give the same numerical result for the C_V, for a given flow regime (laminar or turbulent), and certain flow condition (choked or non-choked flow).

Then, with this equation for the C_V factor it is possible to design the valve testing conditions. The test can be executed with any gas and any pressure difference, measuring the flow rate going through the valve. Usually air is the most suitable gas to run the test, and given an expected flow coefficient factor, we can choose an appropriate Δp to get a flow rate that fits in the test bench instrumentation capacity. Using this equation, a single test measure is needed to obtain the valve C_V for a given flow regime and condition.

IV. ELECTRONIC CIRCUIT FOR THE BENCH INSTRUMENTATION

The electronic circuit for the test bench was designed with the following characteristics.

- Independent circuits for each measurement instruments.
- 8 bit of resolution for each instrument.
- A LCD display for displaying each measurement instrument.
- Communications between the computer and the electronic circuit through PC's DB25 port.
- The electronic components are independent from the computer.

The first stage of the electronic circuit has analogical inputs in correspondence with the measurement sensors that produce current or voltage signals, proportional to the variable measured by each sensor. In the Fig. 3 we show the analogical signal intervals delivered by the sensors. As these signals are not uniform, it is necessary to homogenize them through a circuit that converts a current signal to a voltage signal (of 0-5V).

Figure 4 shows the arrangement of operational amplifiers that convert from current to voltage. If the input to the circuit is a current, it delivers a positive voltage drop, in accordance with the calculated resistors.

After the analogical signals were homogenized, they are converted into a binary combination, for reading a measure or for sending it to a computer. An analogical-digital converter is used to make the conversion from a proportional analogical voltage to binary data. An 8 bits converter for each measurement instrument is used to count the minimum measurements required to perform a test. Hence the minimum resolution by the converters is:

$$resolution = \frac{V_T}{2^n - 1}, \qquad (14)$$

Thus, the resolution 20 mV is enough to obtain a truthful measure of the physical variables.

After the coding is finished, the binary combination is captured by one of the microcontrollers. The microcontroller processes the reading executed by the measurement instrument; subsequently, in the LCD display is shown the measure in the respective units. In Fig. 5 is shown the algorithm designed for this process. Also, a microcontroller is used for each two measurement instruments.

At the beginning, this algorithm configures the ports and initiates the LCD display. Later, one of the analogical-digital converters is triggered, to read the measure from the port where the converter is connected. This measure is converted from a binary word to a BCD word, for processing the equations shown in Fig. 5.

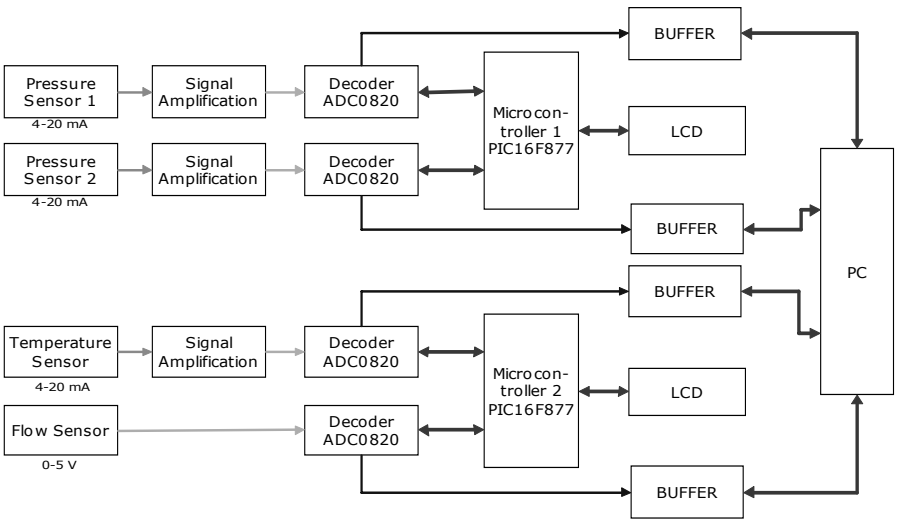

Fig 3. Block diagram for the electronic circuit.

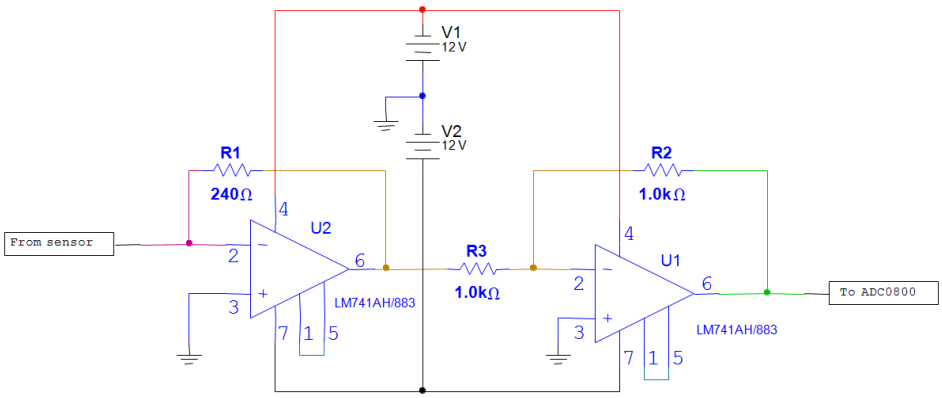

Fig. 4. Arrangement of operational amplifiers.

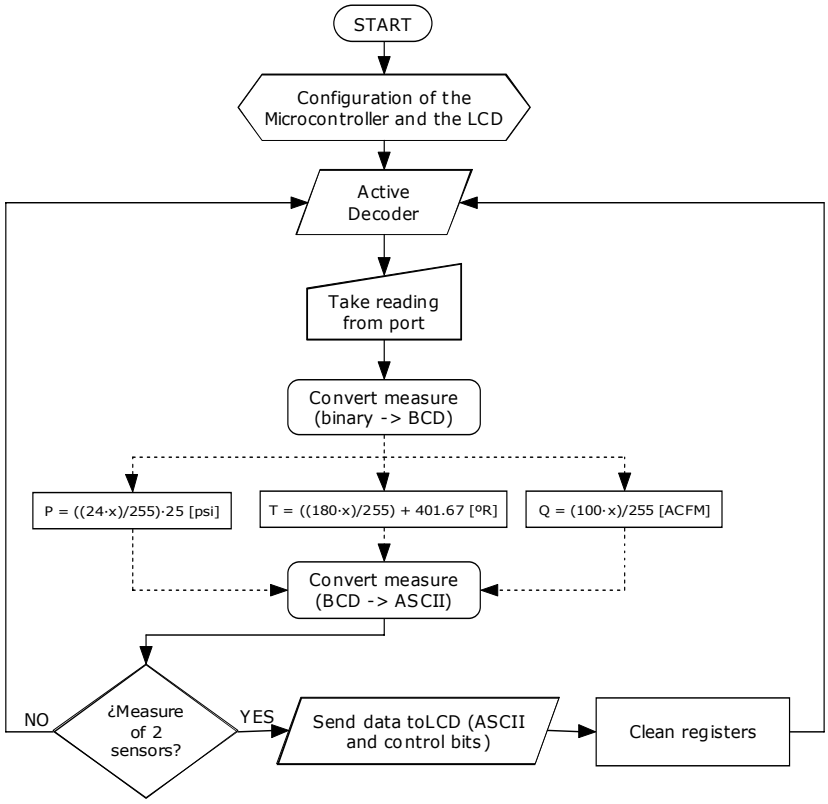

Fig. 5. Algorithm for the microcontrollers

Immediately the processed data is converted to ASCII code to display characters in the LCD. Finally, the algorithm asks if the acquisitions of the two converters are completed. If the answer is false, the algorithm is repeated; if the answer is true, the microcontroller sends the processed data to the LCD display, the employed registers are cleaned and the microcontroller repeats the same algorithm and it stays in a cycle, until the circuit is turned off.

On the other hand, at the output of converter an arrangement of bidirectional buffers is used (Fig. 6). In this way the electronic circuit is communicated with the computer and the data transmission is carried out at a greater speed through the computer's parallel port.

The algorithm for the data acquisition is shown in Fig. 7. The reading processing is similar to that used in the microcontroller, but the data taken of each one of the converters is handled with a graphical environment, programmed specifically for the computer that processes the data and determines the C_V coefficient.

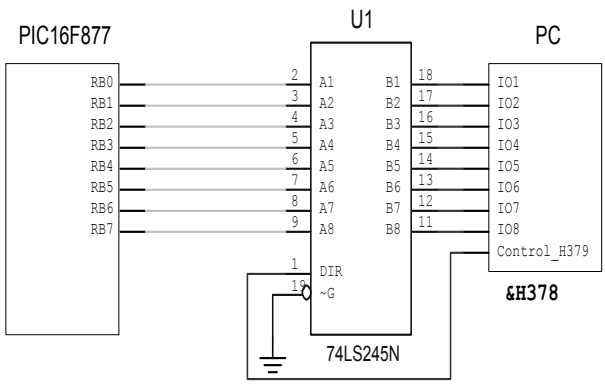

Fig. 6. Arrangement of one of the buffers in order to communicate with the computer.

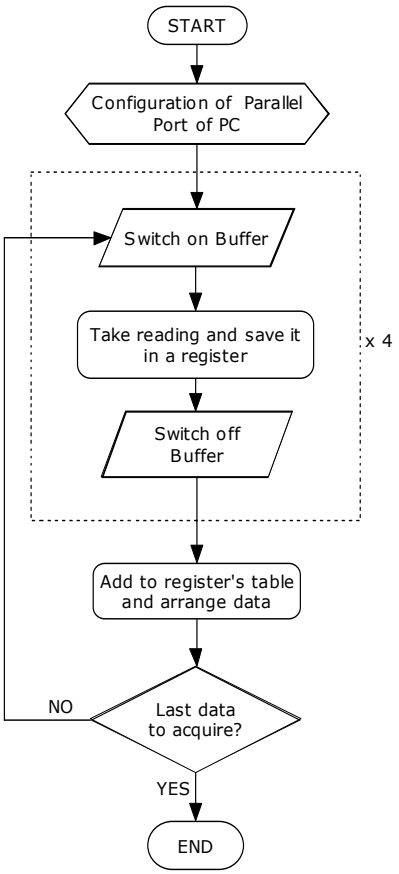

Fig. 7. Algorithm for data acquisition through the parallel port.

V. CONCLUSIONS

The flow capacity coefficient C_V was determined experimentally by taking flow rate, pressure difference and temperature measurements. The valves that can be characterized with this test bench include: the on-off and the continually variable. For the last ones, a finite number of tests must be done with different openings, in order to graph the characteristic curve of the control process valve (see Fig. 8, with the characteristics curves for two types of valves).

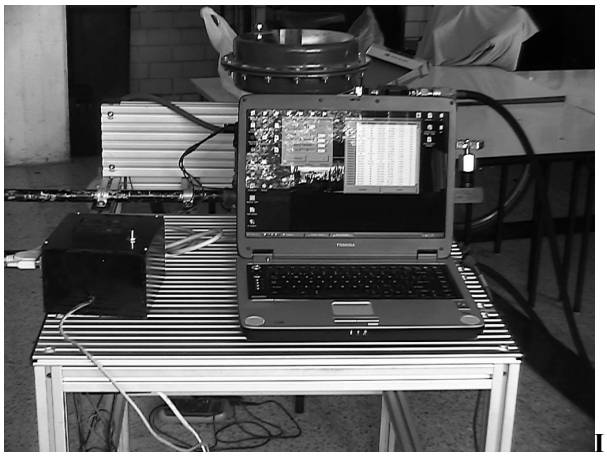

Fig. 9. Test bench for control process valves.

The test bench is fixed over a light structure of aluminum profiles, and could be transported to execute tests in the field. For its operation, it is necessary the supply of compressed air at 600 kPa [87 psi], and 100 W of electrical power at 110 VCA. The electronic circuit with the graphical environment running under MS Windows can be installed in any PC (see Fig. 9).

Finally, with this test bench we can characterize a new control valve in order to detect failures or malfunction of a control valve of the same type.

Nomenclature:

Δp: differential pressure.

ρ: density.

A: transversal area.

C_V: flow capacity coefficient.

Eu: Euler number.

F_γ: specific heat ratio factor.

p: pressure.

s: ratio between gas density and air density (relative density).

T: temperature

$\bar{v}$: average velocity.

V_T: maximum voltage to the inlet of the device.

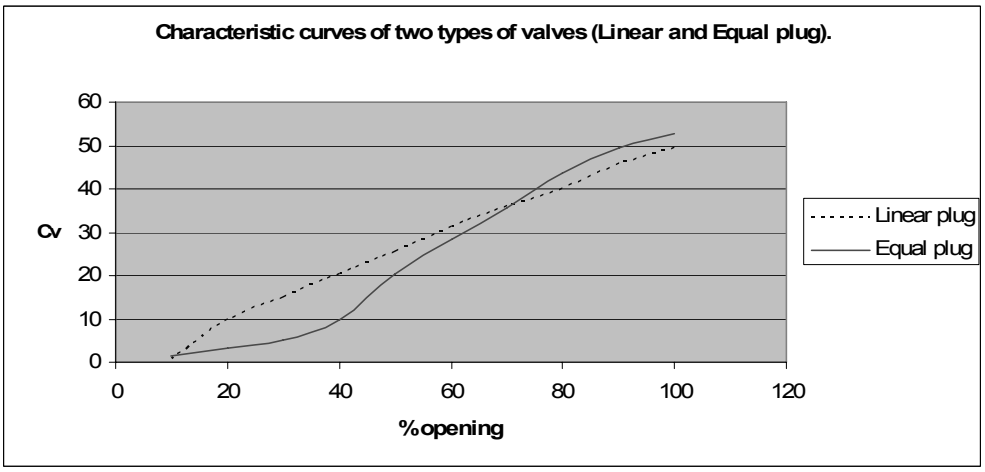

Fig. 8. Characteristics curves for two types of valves.

$\dot{Q}$: volumetric flow.
x: ratio between the pressure drop and absolute pressure.
x_T: pressure differential ratio factor.
Y: expansion factor (ANSI/ISA-75.01.01-2002 (2002)).
z: compressibility f actor.
Subscripts:
1: inlet port.
2: outlet port.
m: valve mounted in the test bench (model).
p: actual operation of the valve (prototype).

ACKNOWLEDGEMENT

This work was supported by the Program for the Professional Development in Automation, through the grant from the Universidad Autónoma Metropolitana and Parker Haniffin-México.

REFERENCES

ANSI/ISA-75.01.01-2002, *Flow Equations for Sizing Control Valves*, Approved 8 April de 2002, ISA (2002).

ANSI/ISA-75.02-1996, *Control Valve Capacity Test Procedures,* Approved 1 October of 1996, ISA (1996).

Driskell, L., *Control-valve selection and sizing*, Instrument Society of America (1983).

FCI 84-1-1985, *Metric Definition of the Valve Flow Coefficient C_v*, Fluid Controls Institute (1985).

Fleischer, H., K. Forster and D. Franson, "Clearing the air on pneumatic valve ratings", *Mach. Des.,* 97-100 (2000).

Fu, W.-S. and J.-S. Ger, "A concise method for determining a valve flow coefficient of a valve under compressible gas flow", *Exp. therm. fluid sci.* **18**, 307-313 (1998).

Masoneilan, *Masoneilan Control Valve Sizing Handbook*. Masoneilan Control Valves Bulletin OZ1000 7/00 (2000).

Rahmeyer, W.J., *Control valve testing procedures and equations for liquid flows*, Utah Water Research Laboratory (N/A). http://www.engineering. usu. edu/cee/faculty/rahm/AppendixA.pdf (2008)

Rahmeyer, W.J. and L. Driskell, "Control valve flow coefficients". *J. of Transportation Engineering*, **3**, 358-364 (1985).

SEMASPEC-90120394B-STD "Test Method for Determination of Valve Flow Coefficient for Gas Distribution System Components", *SEMATECH Technology Transfer*. Approved 22 February of 1993. http://www.sematech.org (1993).

SEMI F32-0706, *Test Method for Determination of Flow Coefficient for High Purity Shutoff Valves*, Semiconductor Equipment and Materials Institute, Approved in May of 2006, http://www.semi.org/ (2006).

Wing Jr., P., "Practical Determination of Control Valve Cv". *ISA J.,* **7,** 90-93 (1960).

Received: May 18, 2007.
Accepted: June 2, 2008.
Recommended by Subject Editor José Guivant.