Mastozoología Neotropical, 27(1):206-210 Mendoza, 2020
Versión on-line ISSN 1666-0536
https://doi.org/10.31687/saremMN.20.27.1.0.09

Nota

A NEW DEVICE FOR CAPTURING SOCIAL BATS IN CAVES

Jairo Pérez-Torres[1], Maria Teresa Herrera-Sepúlveda[1] and Gabriel Pantoja-Peña[1]

[1]Functional Ecology Laboratory. Ecology and Systematics Unit (UNESIS). Department of Biology. Faculty of Sciences. Pontificia Universidad Javeriana. Bogotá, Colombia. [Correspondence: Jairo Pérez-Torres [<jaiperez@javeriana.edu.co>]

ABSTRACT. The most commonly used tools for capturing bats in caves are mist nets and harp traps. However, for behavioral and ecological studies, these methods are not useful when the aim is to selectively capture focal groups or individual bats. Although some tools have been proposed for this, they have limitations with respect to their weight and the logistics of their use. We present the design of a new device called a "cone trap" that allows targeted captures of specific groups (harems, groups of males and females, nurseries and solitary individuals) of bats in caves.

RESUMEN. Un nuevo dispositivo para capturar murciélagos sociales en cuevas. Las herramientas más utilizadas para capturar murciélagos en cuevas son las redes de niebla y las trampas arpa. Sin embargo, para estudios de comportamiento y ecología estos métodos no permiten capturar grupos focales de manera selectiva. Se han propuesto algunas herramientas para capturar grupos de individuos; sin embargo estos tienen limitaciones por su peso y por la logística en su uso. Presentamos el diseño de un nuevo dispositivo que denominamos trampa de cono que permite capturar de manera dirigida grupos específicos (harenes, grupos de machos y hembras, guarderías, e individuos solitarios) de murciélagos en cuevas.

Key words: caverns, Chiroptera, trap, underground systems

Palabras clave: cavernas, Chiroptera, sistemas subterráneos, trampa

Bats have a wide variety of interactions and social structures (Kunz & Lumsden 2003). Their social structure can be as either solitary individuals, numerous groups in a single colony, or groups of harems (Aguirre 2007). The traditional methods for capturing bats consist of the use of mist nets or harp traps placed in open areas and caves (Kunz & Parsons 2009). Species of bats associated with caves are generally ideal for conducting behavioral studies, because they are found in relatively restricted spaces; and, therefore, they can be easily seen. However, in many behavioral studies' individual differentiation by some type of marking is needed. For social structure studies, we recommend capturing all individuals that make up the focal group. The use of harp traps or mist nets have the disadvantage of not being selective, therefore every individual that passes through is captured, even those that are not part of the focus group. Another disadvantage is the stress that individuals suffer from the entanglement and manipulation while being removed from the trap.

Some researchers have proposed devices for capturing groups of bats inside caves. For example, McCracken & Bradbury (1981) proposes the use of a bucket with the bottom removed and replaced with a bag. The bucket is manipulated with extensible aluminum sticks and used to capture complete harems of *Phyllostomus hastatus* in Trinidad. We found that this trap has the following disadvantages: 1) After several capture sessions, the weight of the trap can be tiring for the person who manipulates

Recibido 30 mayo 2019. Aceptado 16 marzo 2020. Editor asociado: L. F. Aguirre.

it; 2) the use of two sticks to manipulate the trap is inconvenient because it avoids having a free hand for any additional action; 3) although the intention of the bucket trap is to prevent individuals climbing the walls, some manage to escape; 4) due to the stiffness of the buckets it is difficult to remove the bats from the trap; and 5) if a large group needs to be captured, a large enough bucket needs to be used. This implies a significant increase in the traps weight and greater difficulty handling it. 6) If the mouth of the bucket is greater that the wingspan of the bats, they can escape from the top; and 7) for grater effectiveness of the trap two people are required to manipulate it.

To resolve these limitations, we have designed and tested a cone trap. This trap is light, easy to use by one person, economical, portable, modular, and it solves all the aforementioned problems. This trap can be used for the selective capture of specimens and diverse bat group sizes that are found in caves. The trap consists of a plastic ring with a cone made of mosquito netting that can be closed at the top. The hoop has PVC supports into which tubes are inserted and a rod is attached for manipulation by a single person (**Fig**. 1).

The following components are required for the construction of the described cone trap that can be easily purchased in any store where construction materials are sold.

Part 1: Hoop with conical catch bag

1) A plastic hoop: This hoop can be hollow or solid, but if it is hollow it decreases the weight of the traps, thus increasing its manageability The hoop is used to hold the mosquito net in the form of a cone and to hold the rope that closes the mouth of the trap. The diameter of the hoop can vary depending on the size of the group and species of bats (5-40) to be captured or the specific part of the caves roof where the bats are roosting. We used a toy hoop known commercially as a "hula hoop". This hoop is hollow, so it has the advantage of being light and rigid enough not to bend when used. The hoop, depending on its size, should be opened to insert three or four PVC "Ts" equidistantly (**Fig**. 1). Also, the "T" can be cut longitudinally leaving a form of "C" and inserted in the hoop by pressure (T of ½").

2) Cone-shaped mosquito netting: This is a cone-shaped bag made of mosquito netting in which the bats are captured. The mosquito netting has the advantage of allowing a good view of its interior in order to manipulate and remove the bats (**Fig**. 1).

3) Fabric and rope closing system: This prevents the bats from escaping. It is placed in the upper part of the plastic ring and has a strong cord (curtain cord is very serviceable) arranged such that it can be pulled from below to completely close the top mouth of the trap (**Fig**.1).

4) Thin nylon curtain-cord: This cord closes the mosquito netting at the top of the cone trap. Its length depends on the height of the cave's roof to be reached (**Fig** 1).

5) PVC "T" ½" (n=3-4): These are used to connect the long PVC tubes that hold the plastic hoop. Three or four of these "T's" are used to connect the tubes and are placed equidistantly on the hula hoop. The remaining "T" can be used to connect an aluminum tube in such a way that the hoop can be used like an insect collecting net to capture the bats. In this case, a tube of 4cm of ½" (**Fig**. 1, part A), a male adaptor ½" to ⅜" (**Fig**. 1, part B) and a female adaptor of ⅜" (**Fig**. 1, part C) will be required.

Part 2: Hoop Support Structure

6) ½" long PVC tubes (n=3-4): These tubes should have a length of 75cm. They are used to connect one end to the PVC "T" to support the hoop. On the other end, they are connected to elbows PVC of 45° (**Figs**. 1 and 2)

7) ½" PVC elbows of 45° (n=3-4): On one end, the PVC long tubes that hold the plastic hoop are connected. On the other end, the short PVC tubes are connected (**Fig**. 2)

8) ½" PVC Short tubes (n=3): the length of these tubes is 15cm. These are joined to the elbows of ½" of 45° on one end. On the other end, they are inserted into a PVC tube. These short tubes give support to the conical structure that forms the trap (**Fig**. 2).

Part 3: Cone-Trap base

9) 2" PVC tube (n=1): this has a length of 25cm; and the three or four PVC short tubes (no. 8) can then be introduced into the upper end of the 25cm PVC tube. The lower end connects to a large 2" PCV joint (**Figs**. 2 and 3).

10) 2" PVC connecter (n=1): this allows the connection between the 2" PVC tube and the first tube reducer (**Fig**. 3).

11) 2" to 1" reducer (n=1): this connects the 2" PVC joint to a second tube reducer (**Fig**. 3).

12) 1" to ½" PVC reducer (n=1): this connects the upper end to the 2" to 1" reducer and connects the lower end to the ½" PVC tube (**Fig**. 3).

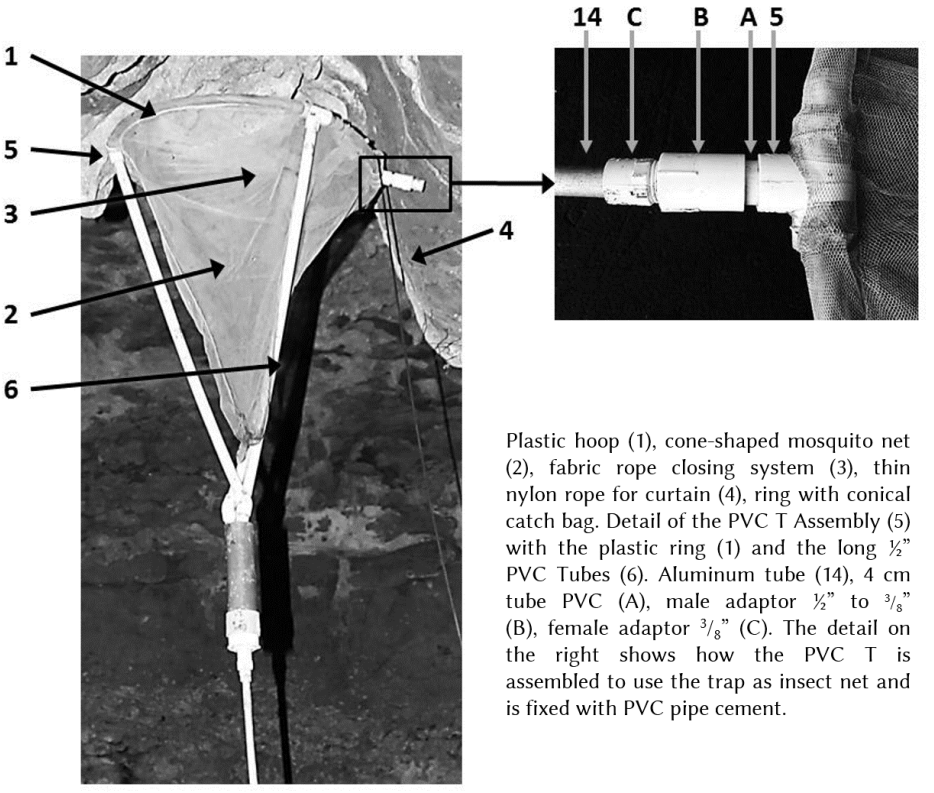

Plastic hoop (1), cone-shaped mosquito net (2), fabric rope closing system (3), thin nylon rope for curtain (4), ring with conical catch bag. Detail of the PVC T Assembly (5) with the plastic ring (1) and the long ½" PVC Tubes (6). Aluminum tube (14), 4 cm tube PVC (A), male adaptor ½" to ³/₈" (B), female adaptor ³/₈" (C). The detail on the right shows how the PVC T is assembled to use the trap as insect net and is fixed with PVC pipe cement.

Fig. 1. Part 1. Hoop with conical catch bag.

13) ½" PVC adapter (hot water) (n=1): this connects the 1" to ½" PVC reducer to the male adaptor of ½" to ⅜" (**Fig**. 3).

14) ⅜ "Aluminum tubes: These must be adjusted in such a way that several can be connected to each other to reach the desired height of the caves roof (**Fig**. 3).

Trap assembly: The cone-trap features two permanent assembly structures. 1) The plastic ring along with the cone-shaped mosquito netting and the cloth with the rope-closing system. The plastic ring will be placed in the "T" of the PVC, which will also be permanently rigged (**Fig**. 1). 2) The union of the large PVC pipe with joints and reducers will also be a structure that is permanently rigged (**Fig**. 3). All parts of this union are glued with PVC pipe cement. It is important that all connections between pieces and connectors are well-welded so that the structure is rigid.

The plastic ring structure is sequentially connected to the long tubes, the 45° elbows and the short tubes (**Figs**. 1 and 2). The short tubes are inserted into the large PVC tube that has the reducers (**Fig**. 2), and the PVC tube is connected to the aluminum tubes or a telescopic pole (**Fig**. 3).

Manipulation of the trap: manipulation of the cone-trap can be accomplished by one person. The person will hold the trap and the fabric and rope closing system. Once the person has chosen the group to capture, he places himself underneath the group and quickly lifts the trap against the roof of the cave. Bats, as they try to escape, will fall into the trap and be captured by the cone-shaped mosquito netting. Then the rope should immediately be pulled closed at the top of the trap. The trap (the cone) is then brought down to remove the bats from the net.

Efficiency and use scenarios: We built three traps of different sizes (30, 57 and 80 cm diameter of the plastic ring). We tested the traps during several sampling days in the Macaregua cave in northern Colombia. Macaregua Cave (6°39'36.2"N 73°0.6'32.3"W) is located near the village Las Vueltas in the municipality of Curití (Santander department)

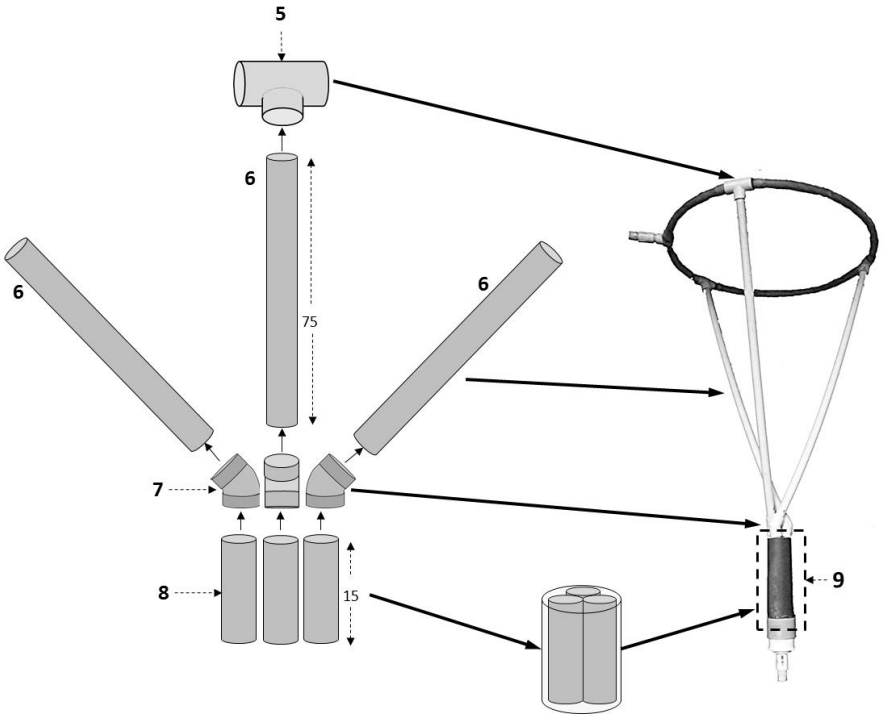

Fig. 2. Part 2: Hoop support structure. PVC T (5), PVC tubes ½ " long (6), 45° PVC elbow ½" (7), PVC tubes of ½" – short (8), PVC pipe 2" (9)

at an altitude of 1565 m (Marinkelle 1996; Pérez-Torres et al. 2015). The cave has two systems of main galleries, a dry gallery of approximately 100 m and a humid one that contains at least six galleries. The principal humid gallery is 600 m deep and has an average height of 3 m. A resident population of *Carollia perspicillata*, *Mormoops megalophylla* and *Natalus tumidirostris* is found in this cave. We were studying *C. perspicillata* that has a social structure formed by harems, mixed groups of males and subadult females, groups of males and groups of females (Martínez-Medina & Pérez-Torres 2018). These bats are distributed in the cave in cavities, chimneys and cracks (Peñuela-Salgado & Pérez-Torres 2015). We have identified approximately 86 groups of harems in different sectors of the cave (Pérez-Torres et al. 2015), and we have conducted behavioral studies that involve follow-ups over time, and for which it is necessary to mark individuals for their identification. For this, we needed to capture specific groups, one at a time. Cone traps have proven very effective for this purpose. We have managed to capture groups of complete harems and mixed groups located up to 6 m above the cave floor. Also, in the case of numerous groups where it is necessary to mark all individuals, up to 40 individuals have been captured in a single attempt at using this trap. When the goal is to capture as many individuals as possible in numerous groups, this method significantly increased the capture efficiency. Furthermore, we found that individuals extracted from the bags show no evidence of damage to the wings, body or head.

The use of harp and mist nets are not well-suited for this type of study because they capture any individual that passes through the nets without allowing for capture of specific focal groups for study. Effective capture of focal groups (harem of any size, mixed group, groups of single males or females and solitary individuals) is not possible with mist or harp nets. The cone trap has the advantage that it allows a focus on the capture of a specific group desired by the researcher.

The mosquito netting is delicate and can be ripped with frequent use, especially at the top of the ring that remains in contact with the roof of the cave. To prevent this, the netting can be reinforced with thicker fabric or with plastic tape. The fabric and rope closing system (No. 3 **Fig**. 1) should always be

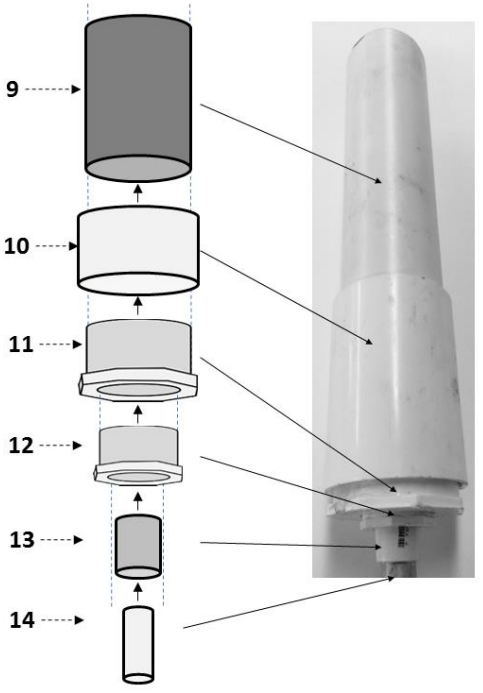

Fig. 3. Part 3: Cone trap Base - PVC Tube 2" (9), PVC 2" joint (10), 2" to 1" reducer (11), 1" to ½" PVC reducer (12), ½" PVC adapter (hot water) (13), ⅜" aluminum tubes (14).

in the cone-shaped mosquito netting to make it easy to close.

Compared to the bucket trap proposed by McCracken & Bradbury (1981), ours has the advantages of greater maneuverability, less weight, greater range of height to the roof of the cave and lower cost. It is important to highlight that the cone trap can be manipulated by a single person, it can have rings of varying diameters that allow access to specific sites such as high cracks and chimneys and also, it allows capturing groups with a high number of individuals. In all cases its use has exhibited good maneuverability for the capture of groups of variable size, it allowed captures in any section of the roof of the cave, besides allowing access to restricted spaces. The advantage that we highlight the most is the ability to discriminate focal groups for capture. Therefore, this type of trap can be favorably used in behavioral and population dynamic studies of gregarious and social species, such as *Carollia perspicillata,* especially in caves and large shelters.

Acknowledgments. We thank Amilbia Sepúlveda and Miguel Herrera for their valuable help with ideas on the design and construction of the trap, the members of the functional ecology lab for logistical support and field work to test the traps, as well as Flor Daza and Elías Gómez, owners of the farm "La Palma" for facilitating access to the Macaregua-Cave and their help during the field days. We also thank Rubén Barquez, Sergio Solari, Jorge Galindo for his comments and contributions to the manuscript. This study is part of the project "Ecology of Bats in Cave Systems in the Department of Santander" supported by the Pontificia Universidad Javeriana (ID 5696).

LITERATURE CITED

Aguirre, L. F. 2007. Historia natural, distribución y conservación de los murciélagos de Bolivia. Centro de Ecología y Difusión Fundación Simón I. Patiño, Santa Cruz de la Sierra.

Kunz, T., & L. Lumsden. 2003. Ecology of cavity and foliage roosting bats. Bats ecology (T. Kunz & B. Fenton, eds.). University of Chicago Press, Chicago, Illinois. https://doi.org/10.1007/978-1-4613-3421-7_1

Kunz, T., & S. Parsons. 2009. Ecological and behavioral methods for the study of bats. The Johns Hopkins University Press, Maryland.

Marinkelle, C. J. 1996. *Babesia* sp. in Colombian bats (Microchiroptera). Journal of Wildlife Diseases 32:534-535. https://doi.org/10.7589/0090-3558-32.3.534

Martínez-Medina, D., & J. Pérez-Torres. 2018. Apuntes sobre la estructura social de *Carollia perspicillata* (Chiroptera, Phyllostomidae) en la cueva Macaregua, Santander, Colombia. Revista de Biodiversidad Neotropical 8:14-21. https://revistas.utch.edu.co/ojs5/index.php/Bioneotropical/article/view/687

McCracken, G., & J. Bradbury. 1981. Social organization and kinship in the polygynous bat *Phyllostomus hastatus*. Behavioral Ecology and Sociobiology 8:11-34. https://doi.org/10.1007/bf00302840

Pérez-Torres, J., D. Martínez-Medina., M. Peñuela-Delgado., M. C. Ríos-Blanco., S. Estrada-Villegas., & L. Martínez-Luque. 2015. Macaregua: The cave with the highest bat richness in Colombia. Check List 11:1-6. https://doi.org/10.15560/11.2.1616

Peñuela-Salgado, M., & J. Pérez-Torres. 2015. Environmental and spatial characteristics that affect roost use by Seba's short-tailed bat (*Carollia Perspicillata*) in a Colombian cave. Journal of Cave and Karst Studies 77:160–164. https://doi.org/10.4311/2015lsc0105